Replacement Parts

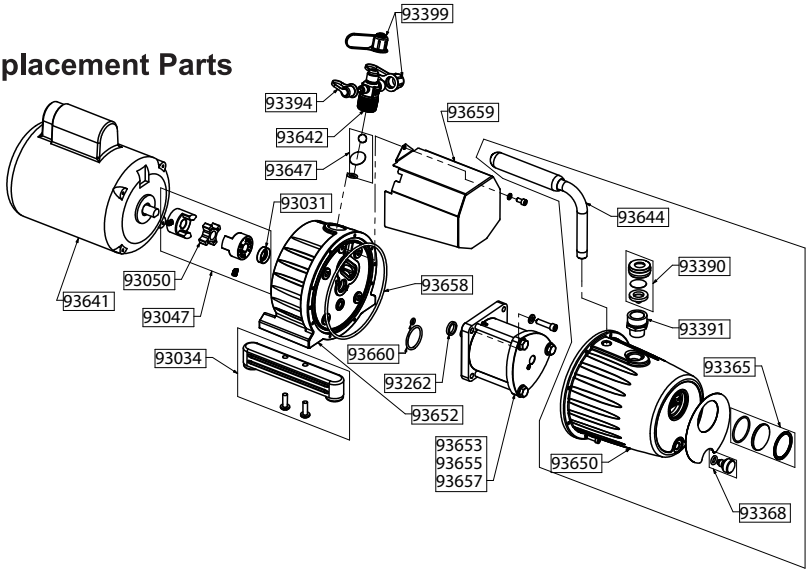

Part #	Description	Part #	Description
93031	Shaft seal	93513	1/2 hp motor - dual voltage 115V/60 Hz, 230V/50 Hz
93034	Universal pump leg (1)	93394	1/4” flare cap and strap
93047	Drive Coupling	93399	3/8” flare cap and strap
93050	Coupling spider for 93047	93641	1/2 hp motor - 115V/60 Hz
93115*	8’ long US cord	93642	3/8”, 3/8” and 1/4” male flare intake fitting
93262	Cartridge ring	93644	BULLET pump handle
93365	Sight glass	93647	BULLET anti-suckback assembly
93368	Oil drain	95431*	8’ long EU cord (detachable IEC-320)
93390	Oil fill cap	95432*	8’ long UK cord (detachable IEC-320)
93391	Oil fill fitting		
Built 2010 - 2013		**Built 2014 -**	
93633	3 CFM (85 L/M) complete cartridge with intake gaskets	93653	3 CFM (85 L/M) complete cartridge with intake gaskets
93635	5 CFM (142 L/M) complete cartridge with intake gaskets	93655	5 CFM (142 L/M) complete cartridge with intake gaskets
93637	7 CFM (200 L/M) complete cartridge with intake gaskets	93657	7 CFM (200 L/M) complete cartridge with intake gaskets
93643	BULLET pump cover gasket	93658	BULLET pump cover gasket
93646	BULLET cartridge baffle	93659	BULLET cartridge baffle
93648	BULLET cartridge gaskets	93660	BULLET cartridge gaskets
93649	BULLET pump cover assembly	93650	BULLET pump cover assembly
93651	Complete mounting body	93652	Complete BULLET mounting body

*Damaged supply cords must be replaced by special assemblies available from the manufacturer or its distributors.